The English Wall Mounted Swan Bathtub Filler

DIMENSIONS (mm)

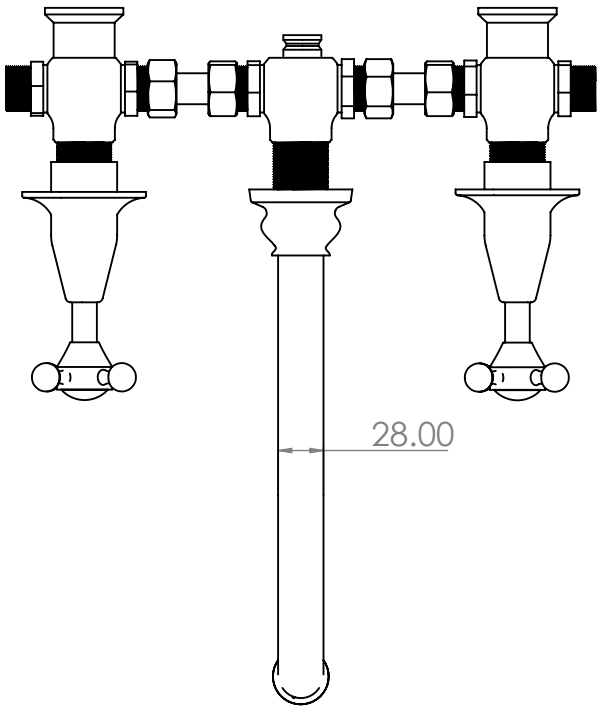

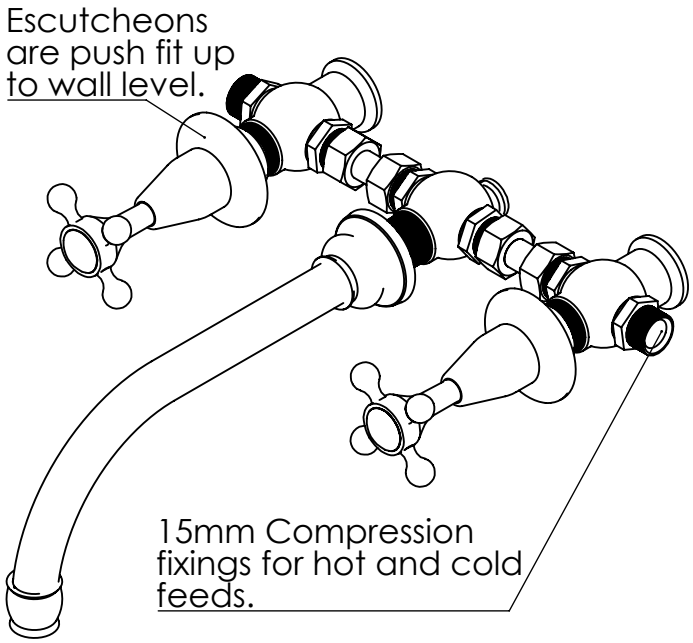

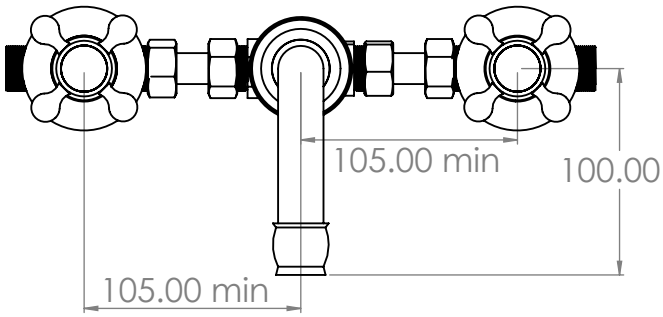

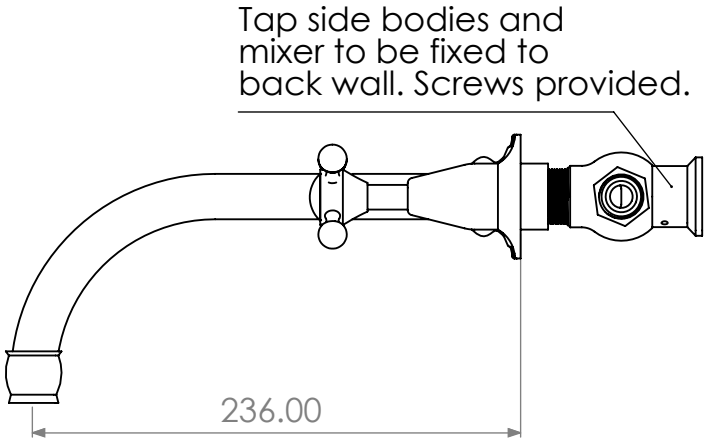

* Cartridges required- 1/4 turn Anti-clockwise 3/4" x2

* Product comes as standard with 15mm feeds, however, this can be altered to 22mm if specified when purchasing.

PLEASE NOTE: Whilst every effort is made to ensure the accuracy of these specification sheets, they are subject to change without notice as part of the company's ongoing product development process.

PHONE: +44 1233 840 840
EMAIL: INFO@CATCHPOLEANDRYE.COM
ADDRESS: CATCHPOLE & RYE, SARACENS DIARY, ASHFORD, KENT, TN27 0SA

©COPYRIGHT 2021 CATCHPOLE & RYE.
ALL RIGHTS RESERVED.

The English Wall Mounted Swan Bathtub Filler

DIMENSIONS (mm)

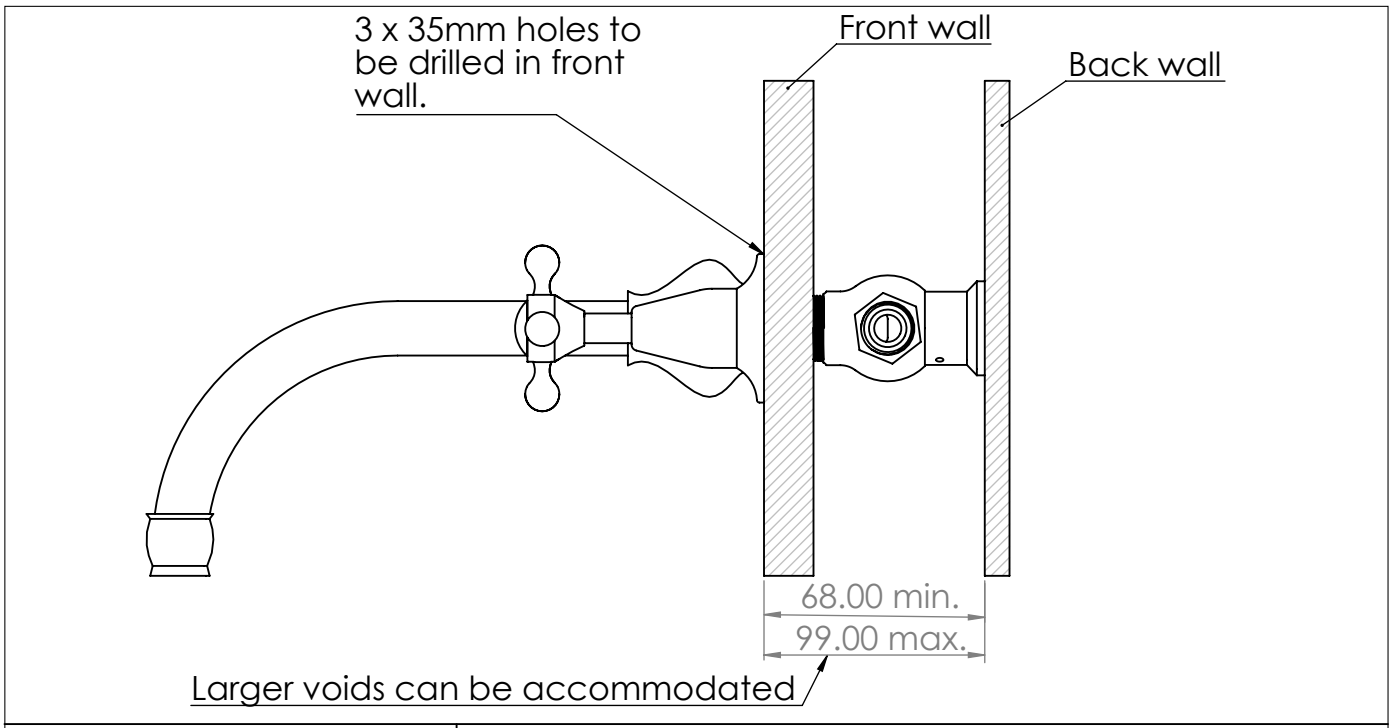

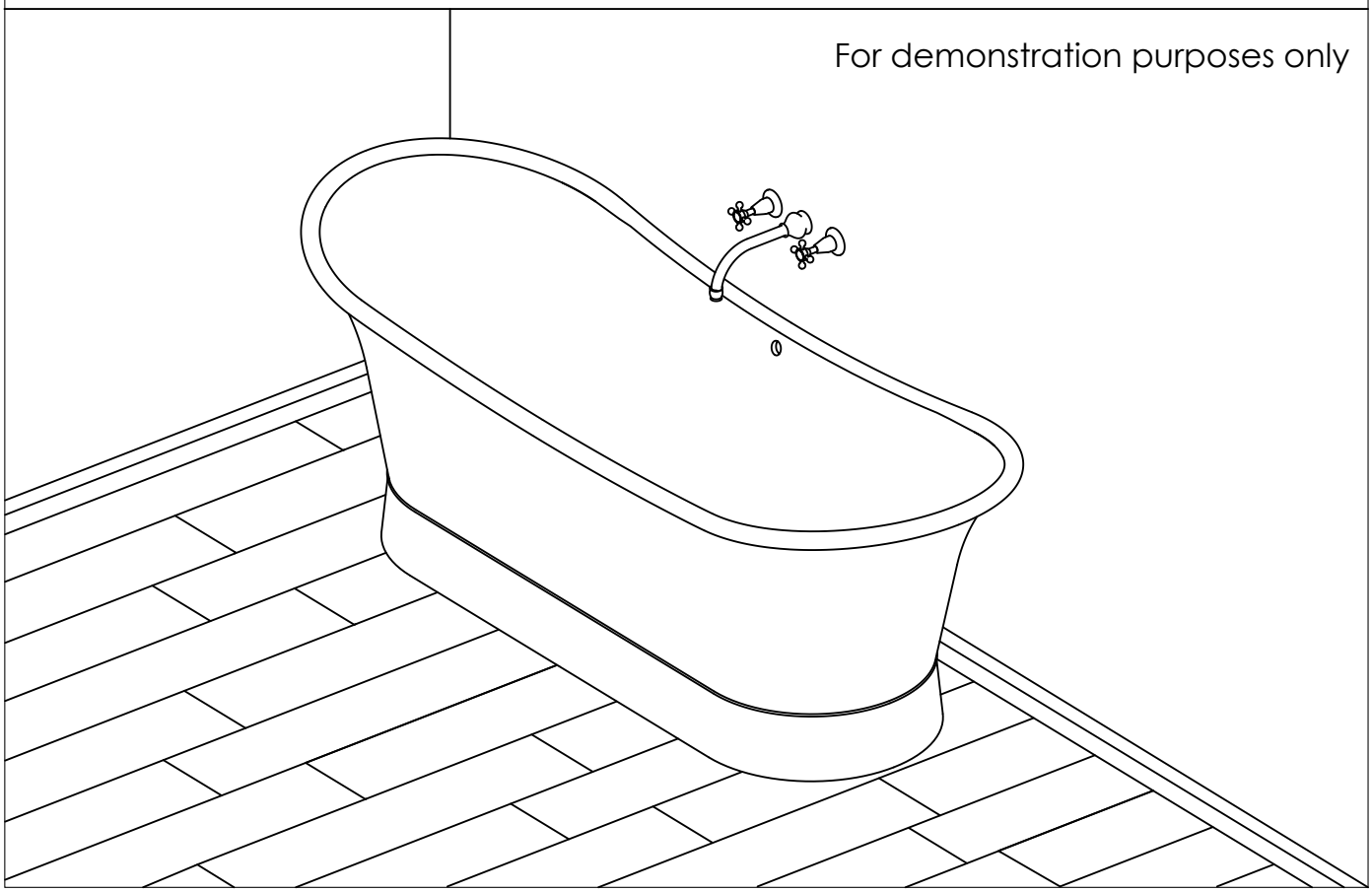

PLEASE NOTE: Whilst every effort is made to ensure the accuracy of these specification sheets, they are subject to change without notice as part of the company's ongoing product development process.

PHONE: +44 1233 840 840
EMAIL: INFO@CATCHPOLEANDRYE.COM
ADDRESS: CATCHPOLE & RYE, SARACENS DIARY, ASHFORD, KENT, TN27 0SA

©COPYRIGHT 2021 CATCHPOLE & RYE.
ALL RIGHTS RESERVED.